Building Guide

Colorado Chapter of the International Code Council

Pole Barn Construction

How to Use this Guide

Provide two sets of plans and complete the following:

1. Complete this Building Guide by filling in the blanks on all pages, and indicating which construction details will be used.

2. Provide 2 Plot Plans (site plan) showing dimensions of your project or addition and its relationship to existing buildings or structures on the property and the distance to existing property lines drawn to scale.

3. Fill out a Building Permit Application.

The majority of permit applications are processed with little delay. The submitted documents will help determine if the project is in compliance with building safety codes, zoning ordinances and other applicable laws.

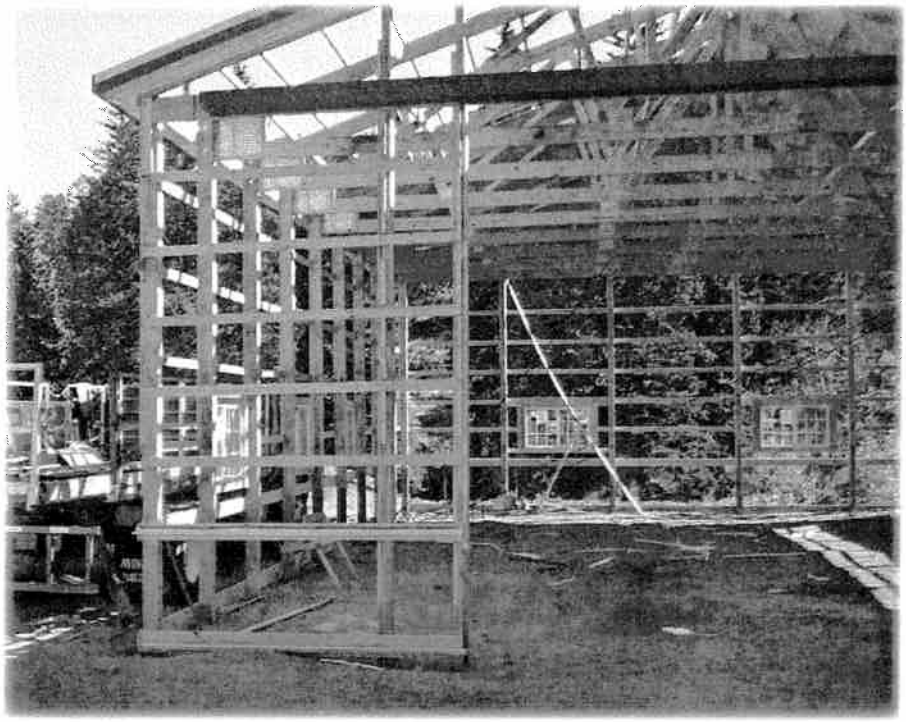

The Colorado Chapter of the International Code Council is a professional organization seeking to promote the public health, safety and welfare to building construction. We appreciate your feedback and suggestions. To obtain a master copy of this building guide, please write to the Colorado Chapter of the International Code Council, P.O. Box 961, Arvada, CO 80001.
http://www.coloradochaptericc.org

This handout was developed by the Colorado Chapter of the International Code Council as a basic plan submittal under the 2006 International Residential Code. It is not intended to cover all circumstances. Check with your Department of Building Safety for additional requirements.

Pueblo Regional Building Dept.
316 West 15th Street
Pueblo, Colorado 81003
(719) 543-0002

Pole Barn Construction

Plan Requirements

Provide all of the details listed below on your plans. Two complete sets of plans and two site plans must be submitted at time of application.

Floor Plan

1. Provide plan view of pole location, spacing, dimensions of the building.

2. Framing plan should show direction, size, and spacing of roof system, purlins, girts, beams and header sizes.

3. Indicate the locations of all window and door openings.

4. Indicate the locations of the poles, and provide dimensions between the poles.

5. Maximum width is 32', max length 40', maintaining at least a 5:3 length to width ratio.

Section Elevation

1. Front, rear and both side views to scale (identify scale).

2. Finished grade line at building.

3. Label the depths to the bottom of the poles. Note that piers must be at least 48 inches in depth, or the plan must be engineered.

4. Label the pole size and type of material. Wood poles embedded in earth must be treated wood, labeled for ground contact.

5. Label the sidewall girt size, type of material, and spacing. Note that the bottom girt must be treated wood if located within 6 inches of grade.

6. Label the beam size and type of material above the poles. Detail the method of fastening the beam to the poles.

7. Label the rafter size and spacing. (if engineered trusses are to be used, you may indicate this instead).

8. Label the rafter tie (or ceiling joist) size and spacing. (Not required for engineered trusses).

9. Label the roof purlin size and spacing, if applicable.

10. Label exterior wall finish material.

11. Label the roof covering material.

Inspections Required

1. Plans and cards need to be on-site at time of all inspections.

2. Setback and Hole Inspection: After holes are dug but before concrete pads are poured.

3. Framing Inspection: Requested after building is up and before any insulation or interior covering is installed. May be final also if no further work is being done.

4. Final Inspection: Requested after all work is completed, such as insulation, concrete slab, electrical, plumbing, heating, and/or sheetrock.

5. Additional inspections may be required by local jurisdictions.

Where allowed by the Jurisdiction, this pole barn guide may be used without the need for any additional engineering, where all of the following comply:

- The barn is no larger than 40'L x 32'W x 12'H side walls
- Rectangular shaped barns must maintain a minimum 5:3 ratio
- The Jurisdictional requirements and barn location do not exceed the pole barn guides 30 PSF (snow) live load or 90 MPH design parameters

This handout was developed by the Colorado Chapter of the International Code Council as a basic plan submittal under the 2006 International Residential Code. It is not intended to cover all circumstances. Check with your Department of Building Safety for additional requirements.

Pole Barn Construction

End Elevation

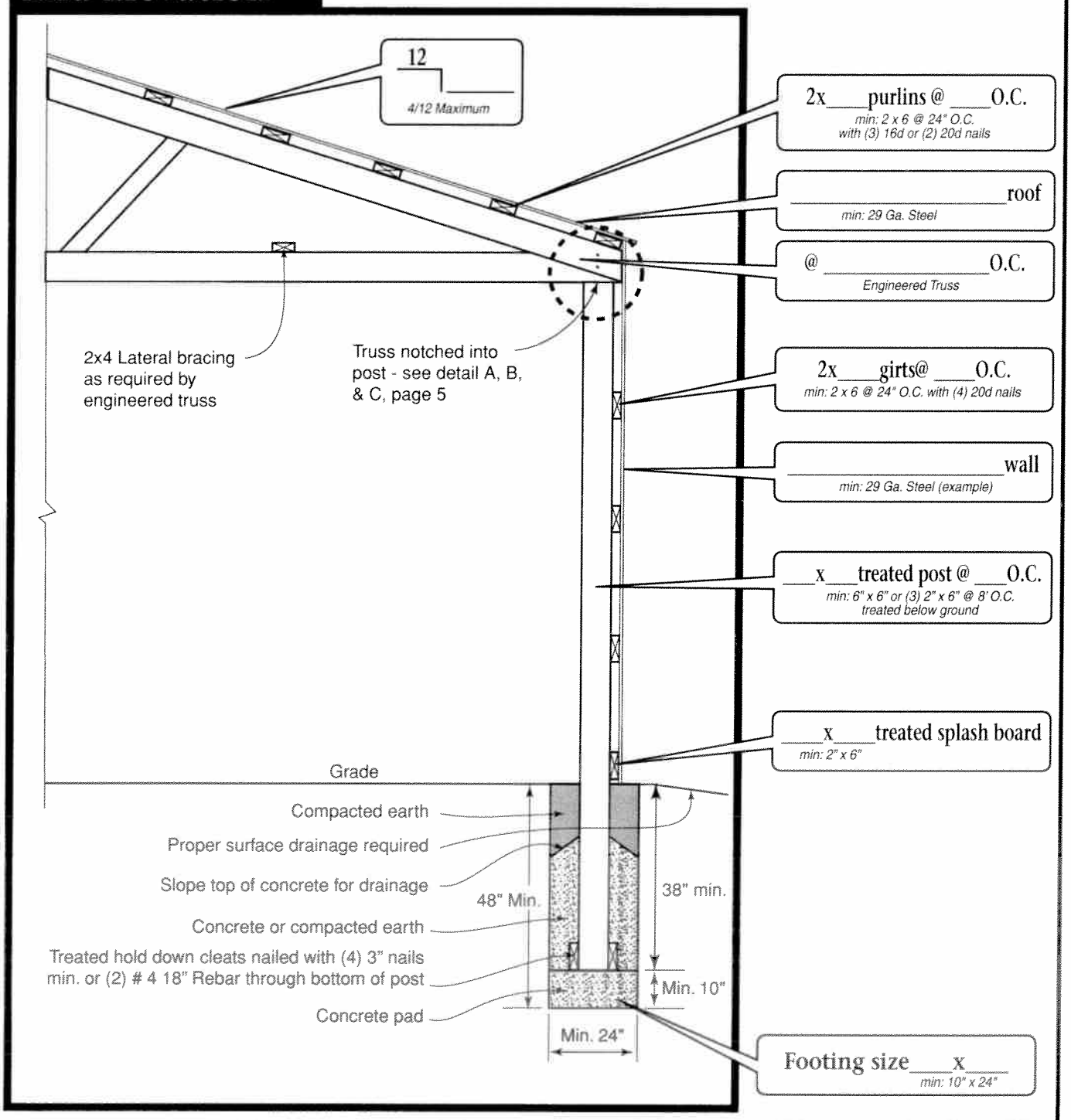

This handout was developed by the Colorado Chapter of the International Code Council as a basic plan submittal under the 2006 International Residential Code. It is not intended to cover all circumstances. Check with your Department of Building Safety for additional requirements.

Pole Barn Construction

Floor plan

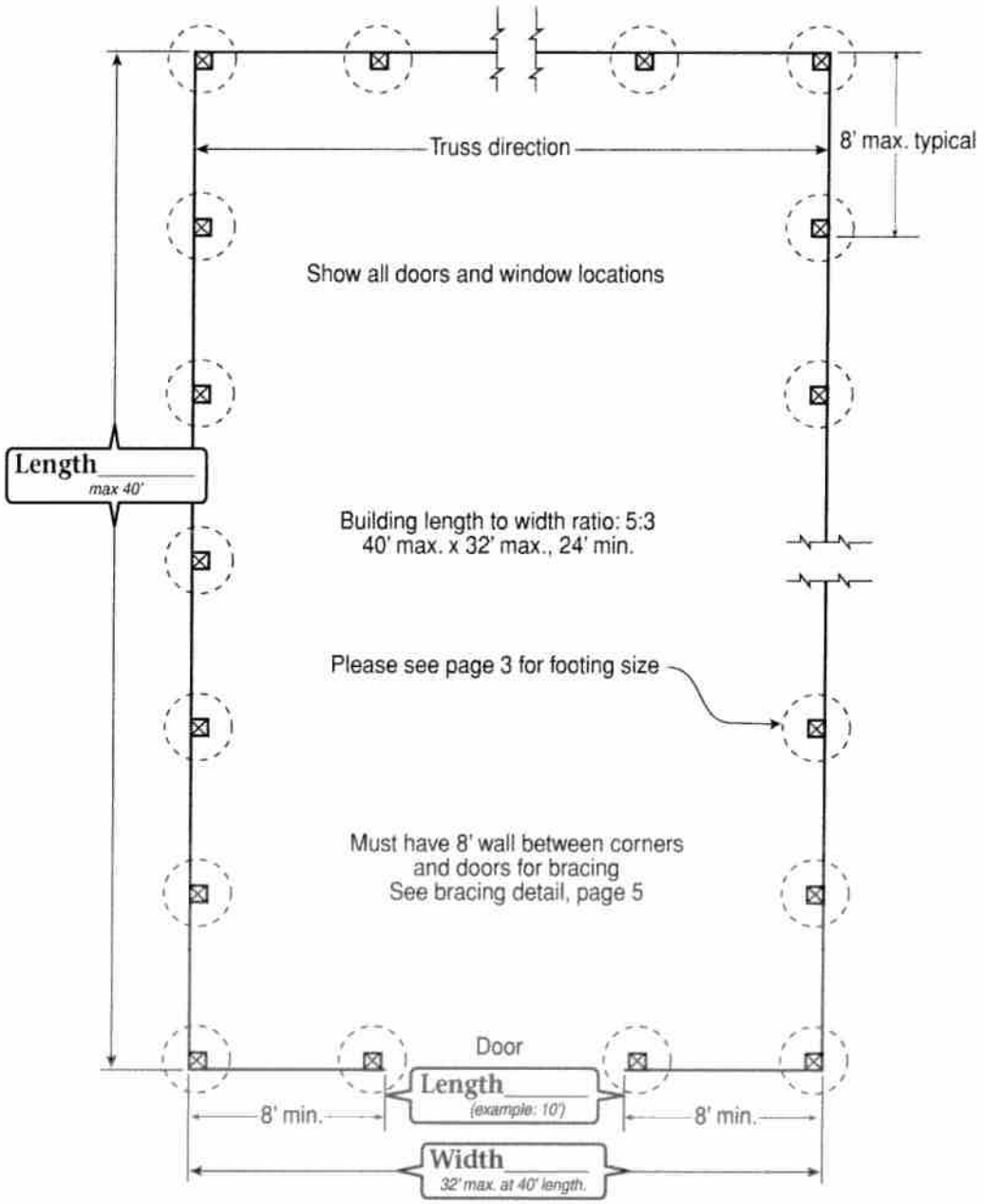

This handout was developed by the Colorado Chapter of the International Code Council as a basic plan submittal under the 2006 International Residential Code. It is not intended to cover all circumstances. Check with your Department of Building Safety for additional requirements.

Pole Barn Construction

Side Elevation

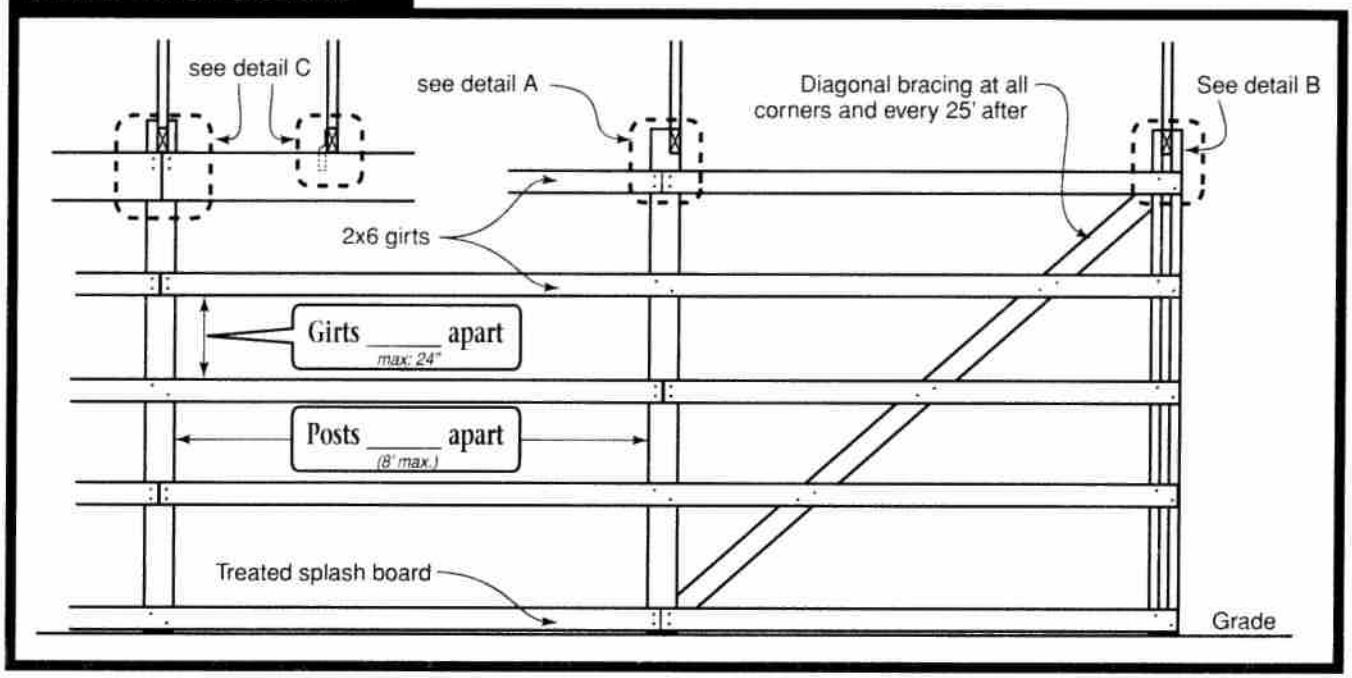

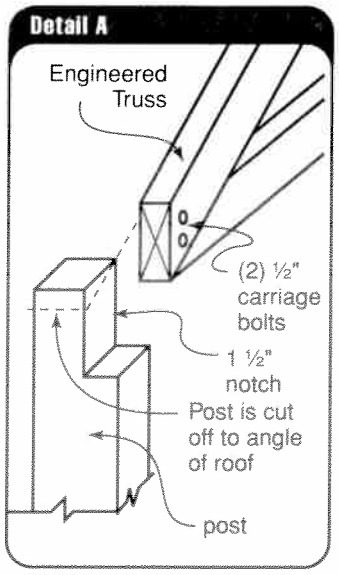

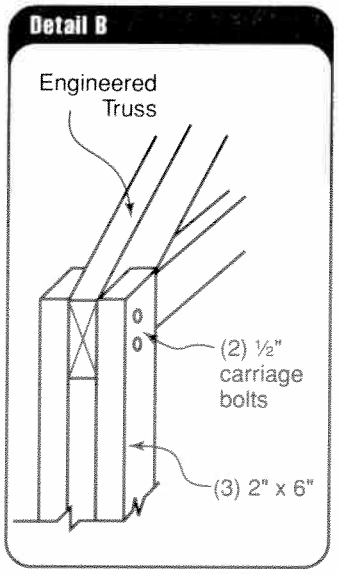

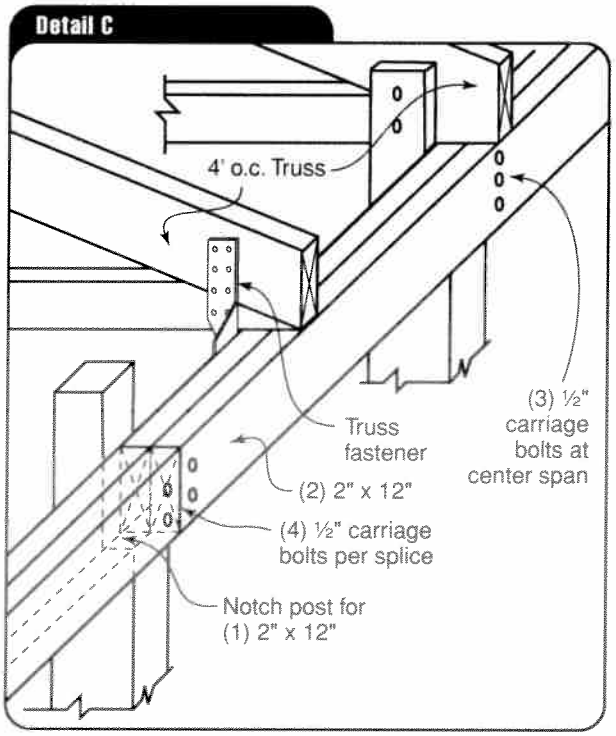

This handout was developed by the Colorado Chapter of the International Code Council as a basic plan submittal under the 2006 International Residential Code. It is not intended to cover all circumstances. Check with your Department of Building Safety for additional requirements.